Signature	Revision History	Date	Rev.
Alex.Dan	For Bulk Production	Dec.20,2005	01

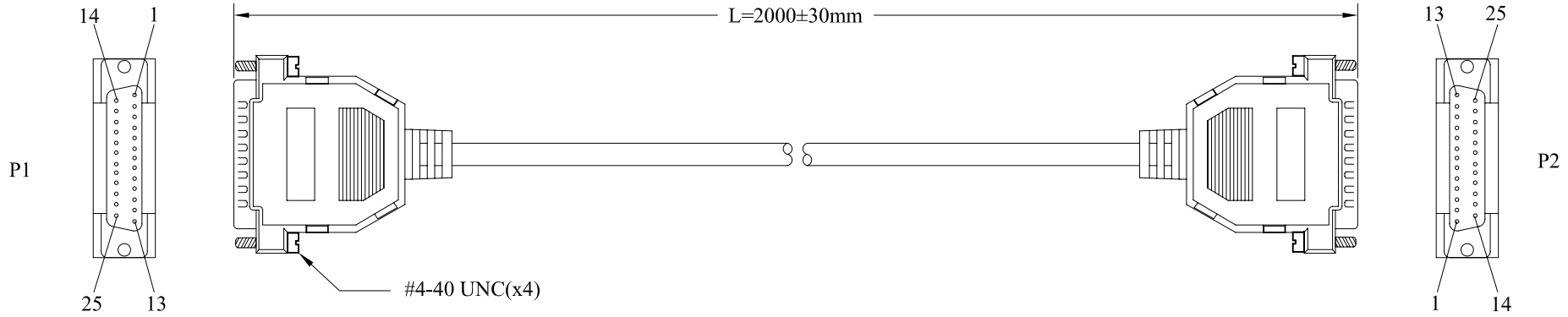

NOTES

1.CABLE:NON-UL 28AWG(7/0.127)TC*25C INS:PVC+DRAIN WIRE
+AL-FOIL/MYLAR PVC JACKET
OD:Ø7.0±0.2mm COLOR:BEIGE.

2.CONNECTOR:
P1&P2:DB25P MALE GOLD FLASH CONTACT,NICKEL PLATED SHELL .

3.HOOD:ASS'Y TYPE, COLOR:BEIGE.

4.ELECTRICAL TEST:
100% OPEN SHORT MIS WIRE TEST
INSULATION RESISTANCE 1M OHMS MIN .

5.PACKING:SEE P-0039 REV.B PACKING DRAWING
PACKING TYPE: DB VP4.
(HANKING SIZE MUST BE SMALLER THAN PACKING)

PIN OUT

P1 1 2 3.....14 15 16 17 18 19 20 21 22 23 24 25 SHELL

DRAIN

P2 1 2 3.....14 15 16 17 18 19 20 21 22 23 24 25 SHELL

RoHS Compliant

EAN Code: 4016032063674

	Date	Name
Drawn by	Dec.20,2005	Alex Dan
Checked by	Dec.20,2005	Norman Xu
Approved by		

ASSMANN Electronic GmbH

ST81407

Part No.

AK 401 2M

Title.

CONNECTOR CABLE DB25 M/M

Scale	N/A	Sheet
Unit	MM	1/1